SR28-0494-1
Course 71021

Service Education
Student Guide

IBM 4860 PCjr Product Training

Preface

This publication is primarily intended for use by IBM personnel enrolled in course 71021.

Second Edition (June 1985)

This major revision obsoletes ZR28-0494-0.

References in this publication to IBM products, programs, or services do not imply that IBM intends to make these available in all countries in which IBM operates. Any reference to an IBM program product in this publication is not intended to state or imply that only IBM's program product may be used. Any functionally equivalent program may be used instead.

Publications are not stocked at the address given below. Requests for IBM publications should be made to your IBM representative or to the IBM branch office serving your locality.

Address comments concerning the content of this publication to IBM Corporation, 4304 90L/234-2, 951 NW 51st Street, Boca Raton, Florida U.S.A. 33431. IBM may use or distribute whatever information you supply in any way it believes appropriate without incurring any obligation to you.

© Copyright International Business Machines Corporation 1984, 1985

TABLE OF CONTENTS

	Page
General Information	iv
Basic Skills	iv
Legend	iv
Safety	v
Course Start Procedures	v
Course Description	vi
Prerequisites	vi
Materials Required	vi
Course MAP	vii
UNIT 1 - Introduction	1
Session 1 - System Configurations	2
Assignment 1 - Standard Configurations	2
Assignment 2 - Options	3
Session Summary	3
Session 2 - Diagnostics	4
Assignment 1 - Customer - Level Tests	4
Assignment 2 - Advanced - Level Tests	5
Assignment 3 - Replaceable Units	5
Session Summary	6
Appendix A - Figures 1.1 - 2.3	7
Appendix B - Hardware Maintenance and Service Manual	19

GENERAL INFORMATION

BASIC SKILLS

1. Utilize customer - level and advanced - level tests to isolate a failure symptom to:

   - o PCjr system unit
   - o All standard features
   - o All optional features
   - o Any replaceable elements
   - o All adapter cables

2. Locate and identify the following:

   - o System board
   - o Power transformer and power board
   - o Diskette drive and adapter
   - o Side - attached options
   - o Keyboard
   - o Connectors and adapters
   - o Memory and display expansion

LEGEND

BASIC	Beginners all-purpose symbolic instruction code
CPU	Central processing unit
FRU	Field replaceable unit
I/O	Input/output
I/R Link	Infrared link
Kb	Kilobyte
LED	Light emitting diode
Memory	Storage
PICs	Problem isolation charts
POST	Power-on self test
RAM	Random access memory
RF	Radio frequency
ROM	Read only memory

SAFETY

An individual may be exposed to two conditions - NON-HAZARDOUS and HAZARDOUS.

In a NON-HAZARDOUS condition, "an employee may work alone providing arrangements are made for at least an hourly check relative to his/her well being". This may be accomplished by telephone or direct personal communication.

In a HAZARDOUS condition, "an IBM employee shall never work alone". Step 5 in the safety practices section of the Electrical Safety Handbook (Form S229-8124) should be observed if a situation occurs involving any of the following conditions:

- Presence of exposed potential in excess of 30 Vac or 42.5 Vdc to ground or between components which are likely to be simultaneously contracted.
- Power supply exposed with safety covers removed and ac power cord plugged into an ac outlet.
- Power being applied to a machine with moving parts when safety covers are removed.

You should ensure that local arrangements are made to comply with these safety precautions.

COURSE START PROCEDURES

Procedures for FIS II users:

1. Sign on the FIS terminal using the format sEEEEEE/71021 where EEEEEE is your serial number.
2. Read each screen carefully and follow directions.
3. Use the enter key to proceed to a new screen.
4. Contact your B/O education coordinator if you need assistance.

You must complete this course and pass the final test with a grade of 100%. A completion certificate will be printed, and a complete will be logged in your history file.

COURSE DESCRIPTION

The IBM PCjr 4860 is a powerful, compact computer system which offers a wide variety of options to the user. This course is designed to teach the configuration of the PCjr 4860-04 (model 4) and PCjr 4860-67 (model 67), the available options and the maintenance strategy. This course consists of one unit.

MATERIALS REQUIRED

- IBM 4860 PCjr Product Training Student Guide, SR28-0494-1
- FIS terminal

PREREQUISITES

Prior training on 5150, 5155, 5160 and 5170 (PC, PC Portable, PC XT and Personal Computer AT)

IBM **FIS Course Map**

Course Map

IBM PCjr 4860 PRODUCT TRAINING

Course Name

71021

Course Number

Course Length 1.2 (Low) 3.0 (High) 1.6 (Average)

Session/Topic	Printer Requirements (See printer legend)	Student On-Terminal Time (Estimate)	Student Off-Terminal Time (Estimate)	Student Actual Time (Filled in by student)	Monitor Terminal Time (Estimate)	Media Requirements (See media legend)	Training Machine Required*
SESSION 1 - SYSTEM CONFIGURATIONS		0.8					
SESSION 2 - DIAGNOSTICS		0.8					
Totals		1.6					

Media Legend
A. 16mm Motion Film
B. 8mm Motion Film
C. Filmstrip
D. Slides
E. Microfiche
F. Video Tape
G. Audio Tape
H. Mock-Up
J. Simulator
K.
L.
M.

Printer Legend
O. Occasional Use
R. Real-Time (high priority)

*Check if B/O Training Machine Required

Sheet 1 of 1

UNIT 1 - INTRODUCTION

This unit describes the PCjr 4860-04 and 4860-67, the available options and the diagnostics. This unit contains the following sessions:

Session 1 - System Configurations
Session 2 - Diagnostics

SESSION 1 - SYSTEM CONFIGURATION

This session should take approximately .8 hours to complete.

The IBM PCjr 4860 is a highly versatile, compact microcomputer with application in the home and small businesses. There are two models available:

- The IBM PCjr 4860-04 (model 4)
- The IBM PCjr 4860-67 (model 67)

This session gives you an overview of the IBM PCjr 4860 and the available features.

OBJECTIVE

Upon completion of this session you should be able to:

1. State the configurations of the IBM PCjr 4860.
2. State and describe all available options.

ASSIGNMENT 1 - STANDARD CONFIGURATIONS

This assignment describes the two different PCjr models available and the standard features.

Objective

State the configurations of the IBM PCjr 4860.

Highlights

- Models
- Standard features
- System board

Activity 1

Reading description of system and components on FIS screen.

Activity 2

Locating and identifying components and FRUs in Appendix A of the student guide.

ASSIGNMENT 2 - OPTIONS

This assignment lists and describes all the options that are available for the PCjr.

Objective

State and describe all available options.

Highlights

- List of options
- Options description

Activity 1

Reading description of options on the FIS screen.

Activity 2

Locating and identifying optional features in Appendix A of the student guide.

SESSION 1 - SUMMARY

This concludes Session 1. You should be able to state the configuration of the IBM PCjr 4860-04 and 4860-67 and describe the standard and optional features which are available.

The IBM 4860 PCjr has several diagnostic aids that will help isolate hardware problems. These diagnostics will indicate a specific unit, error code or field replaceable unit (FRU). Diagnostics are discussed and FRUs are identified in Session 2.

SESSION 2 - DIAGNOSTICS

This session should take approximately .8 hours to complete.

There are two levels of diagnostic programs for the IBM PCjr 4860. These diagnostic programs help isolate a problem in the PCjr system. This session will discuss these diagnostic programs and the replaceable units.

OBJECTIVE

Upon completion of this session you should be able to:

1. Run power-on self tests (POSTs) and customer tests.
2. Run advanced power-on self tests and advanced tests.
3. Identify the replaceable elements and field replaceable units (FRUs) in the PCjr.

ASSIGNMENT 1 - CUSTOMER LEVEL TESTS

This assignment shows an overview of the diagnostic programs available for the IBM PCjr 4860 and the procedures for running customer - level tests.

Objective

Run power-on self tests and customer tests.

Highlights

- Diagnostic programs overview
- Power-on self tests
- Customer tests

Activity 1

Reading on the FIS terminal.

Activity 2

Locating charts and reading test procedures in the student guide.

ASSIGNMENT 2 - ADVANCED - LEVEL TESTS

This assignment teaches the procedures for running advanced POST and advanced tests.

Objective

Run advanced power-on self tests and advanced tests.

Highlights

- Advanced POST
- Advanced tests

Activity 1

Reading on the FIS terminal.

Activity 2

Reading test procedures in the student guide.

ASSIGNMENT 3 - REPLACEABLE UNITS

The IBM 4860 PCjr is comprised of two types of replaceable units. They are the replaceable element and the field replaceable unit (FRU).

Objective

Identify the replaceable elements and field replaceable units (FRUs) in the PCjr.

Highlights

- Field replaceable units
- Replaceable elements

Activity 1

Reading description of replaceable units on the FIS screen.

Activity 2

Locating replaceable units in the student guide.

SESSION 2 - SUMMARY

This concludes Session 2. You should be able to run customer - level tests, advanced - level tests and identify the replaceable units.

APPENDIX A

FIGURE 1.1

Pictured is the IBM PCjr 4860-67 (model 67).

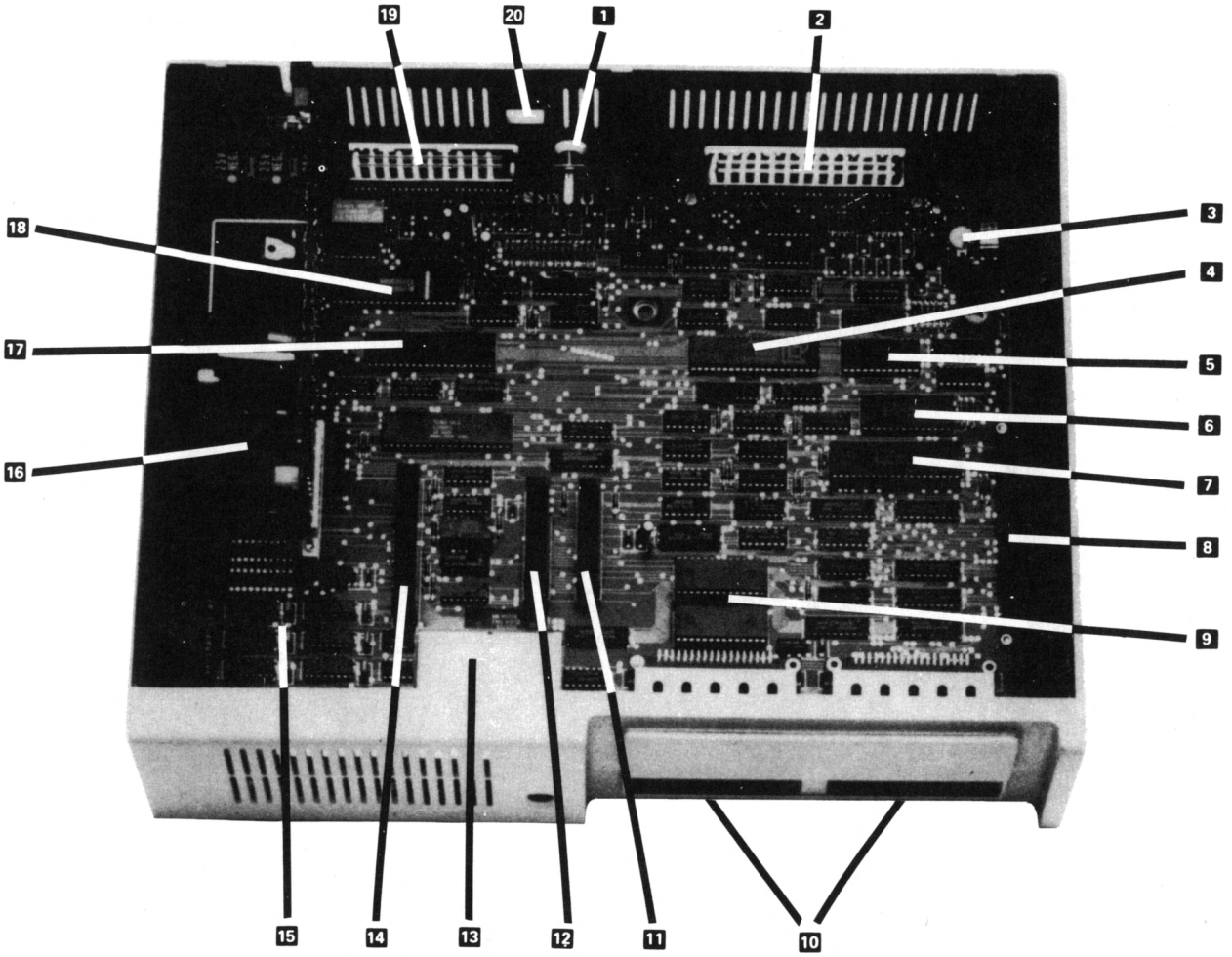

1. Composite video connector
2. Connectors (see Figure 1.6 for detail)
3. System clock circuitry
4. 8255A-5 for I/O expansion connector
5. 8253-5 chip used for date, time and sound generation
6. 8259A interrupt controller
7. 8088 CPU
8. I/O expansion connector
9. Two 32K ROM chips
10. Two cartridge slots
11. Diskette adapter I/O slot
12. Internal modem I/O slot
13. Infra-red receiver
14. 64K memory and display expansion slot
15. RAM memory
16. Power regulator card
17. 6845 CRT controller
18. 8250 async communications chip for serial port
19. Connectors (see Figure 1.6)
20. Opening for internal modem modular plug and cable

FIGURE 1.2

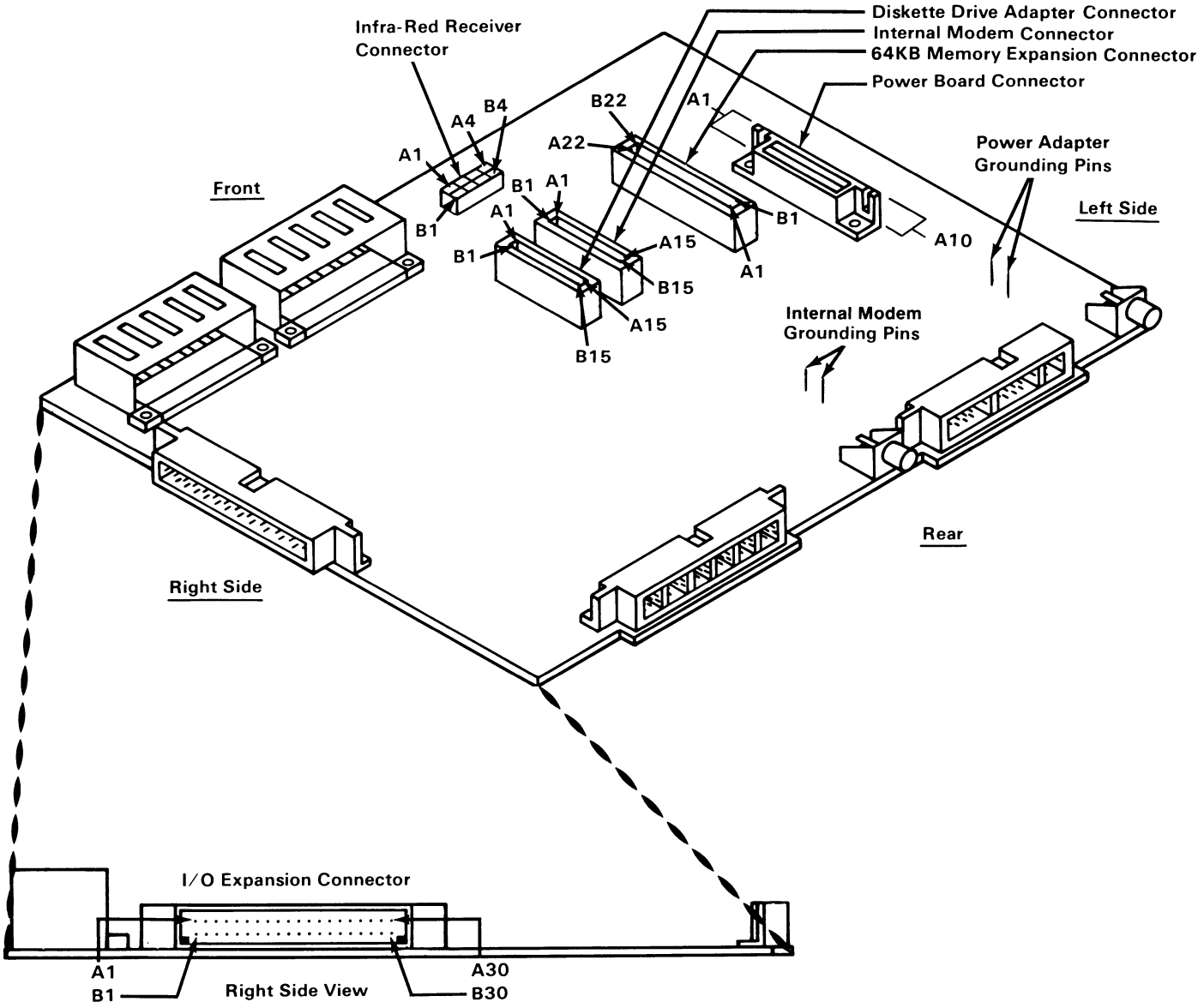
Infra-Red Receiver Connector
Diskette Drive Adapter Connector
Internal Modem Connector
64KB Memory Expansion Connector
Power Board Connector
Power Adapter Grounding Pins
Left Side
Front
Internal Modem Grounding Pins
Rear
Right Side
I/O Expansion Connector
A1
B1
A4
B4
B22
A22
A15
B15
A10
A30
B30
Right Side View

FIGURE 1.3

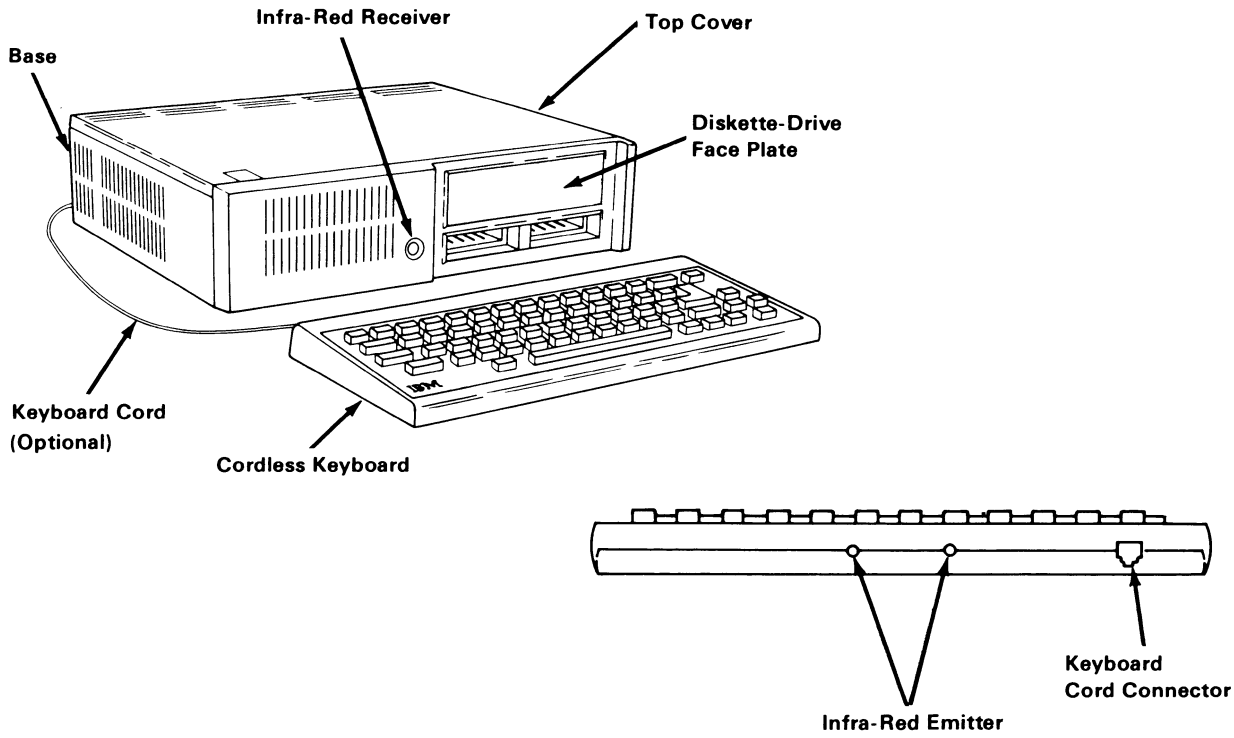

FIGURE 1.4

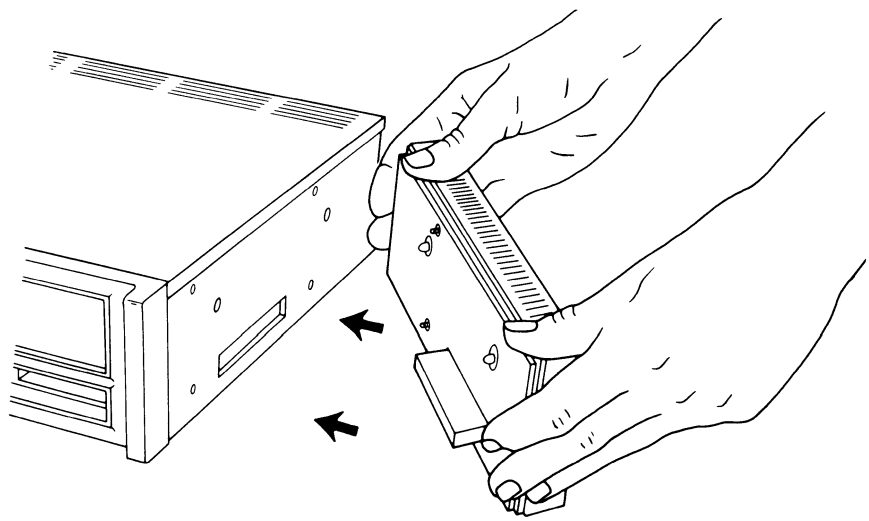

FIGURE 1.5

Letter Designation	Connector Use
J	Left Joystick
J	Right Joystick
L	Spare
K	Keyboard
LP	Light Pen
T	Television

Letter Designation	Connector Use
V	Composite Video
D	Direct Drive Video
S	Serial Device
C	Cassette
A	Audio

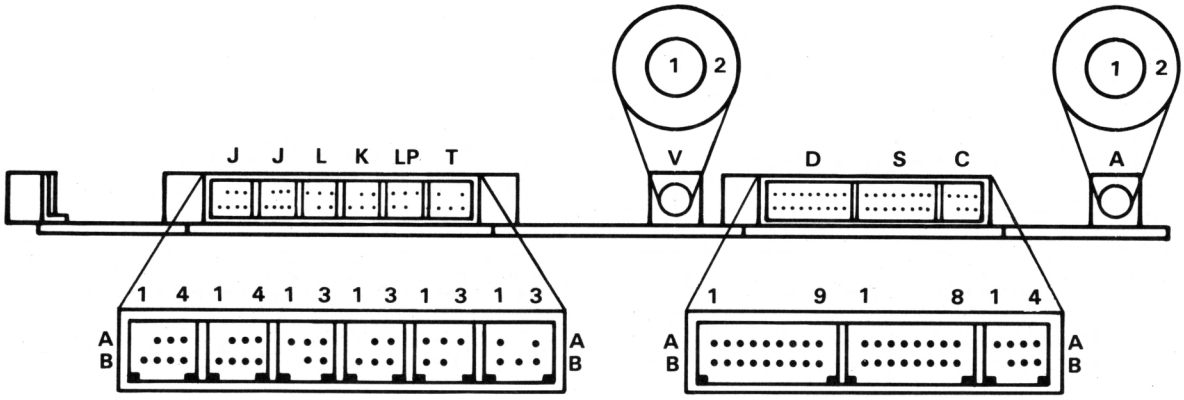

FIGURE 1.6

FIGURE 1.7

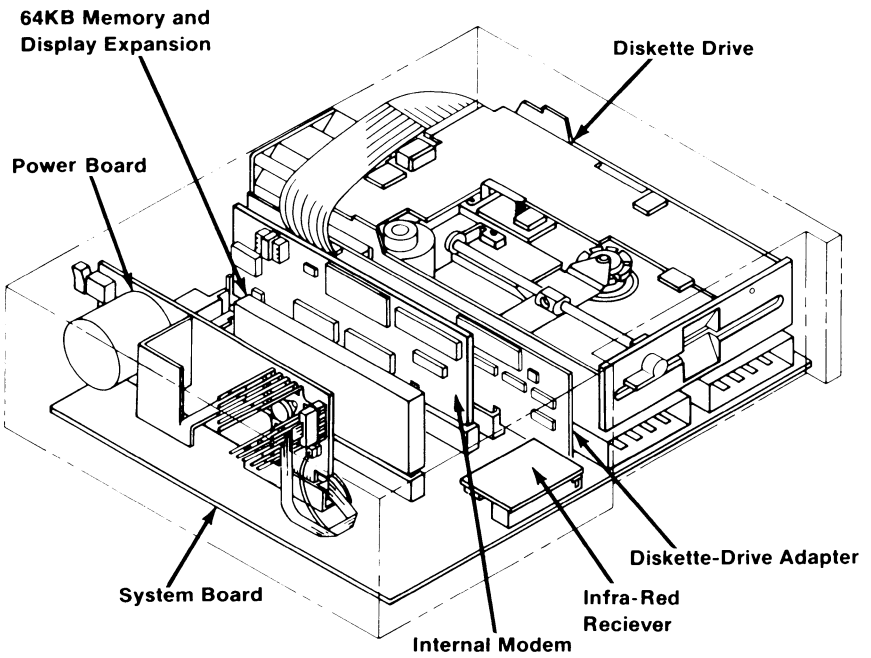

FIGURE 1.8

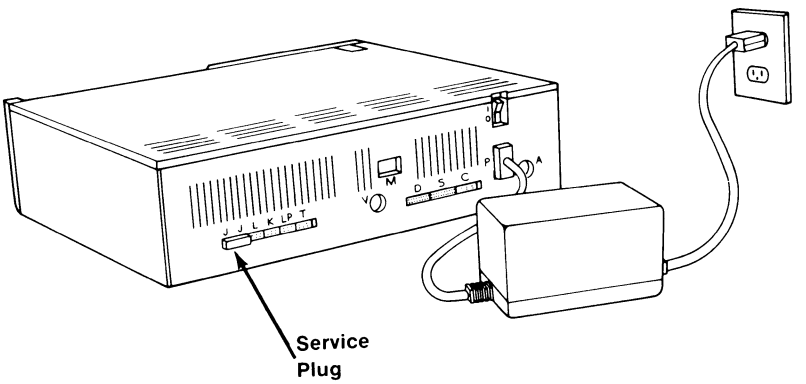

FIGURE 1.9

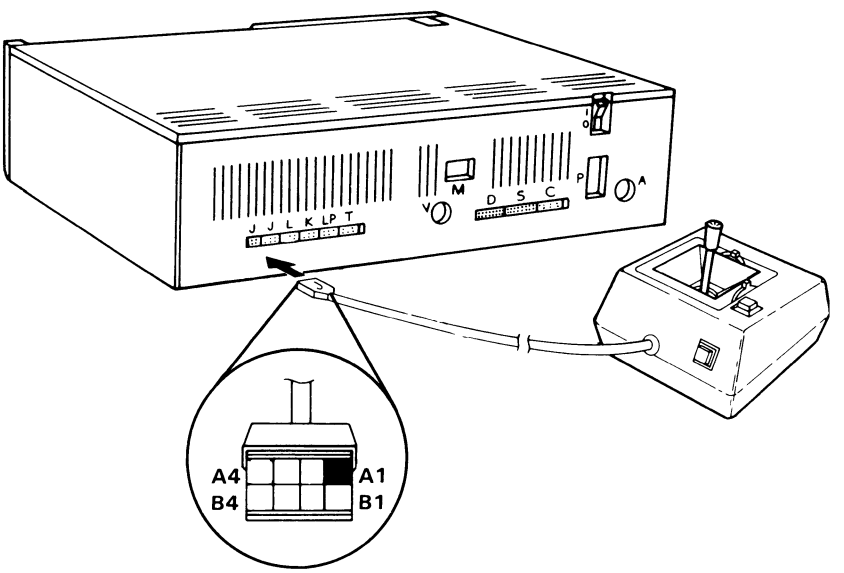

FIGURE 1.10

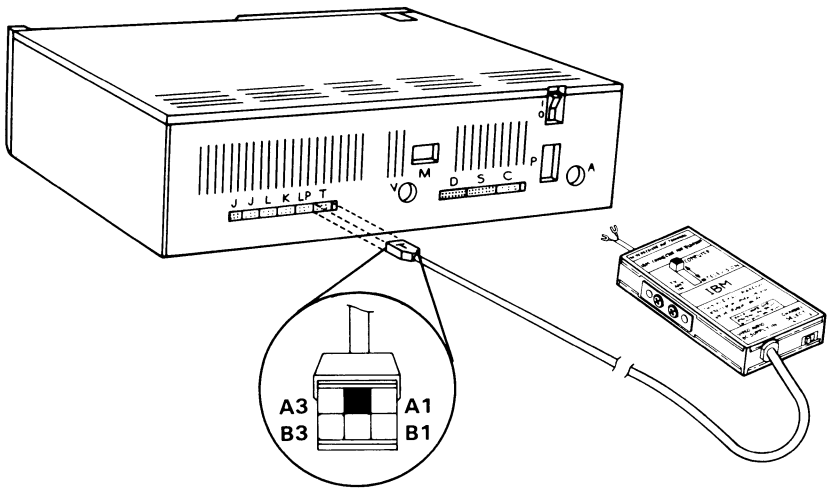

FIGURE 1.11

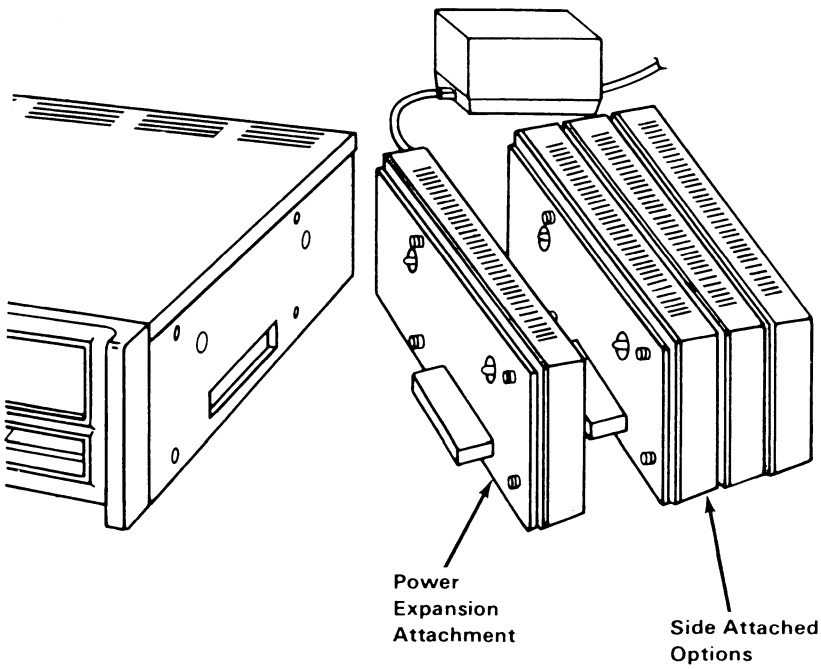

FIGURE 1.12

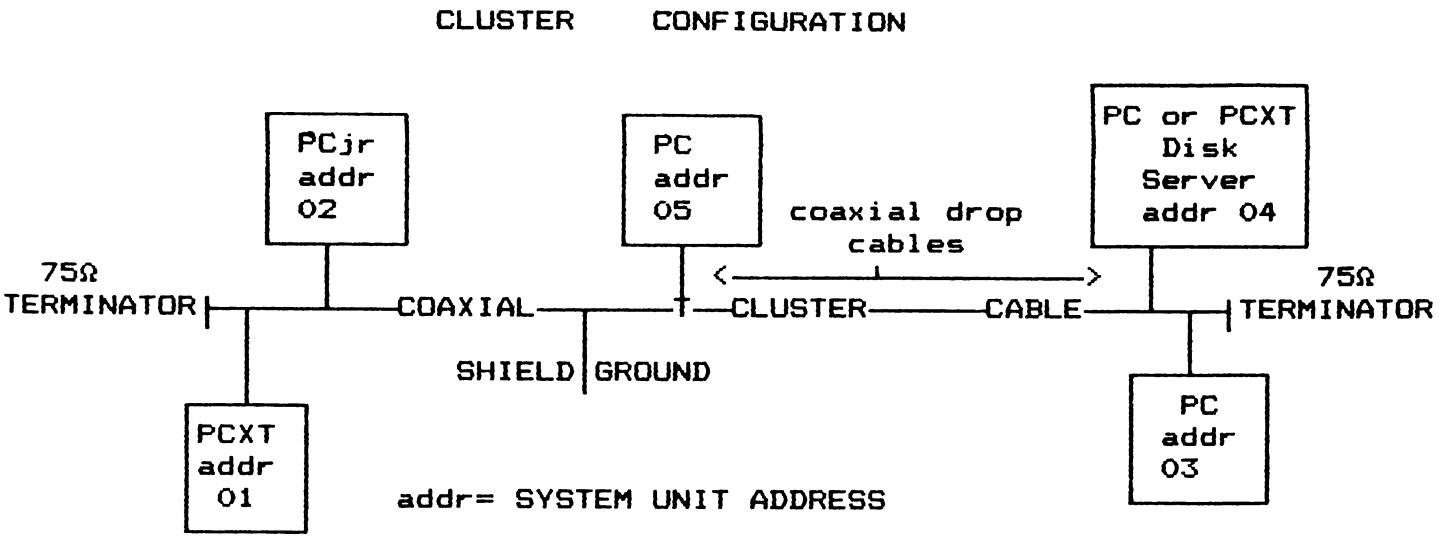

FIGURE 1.13

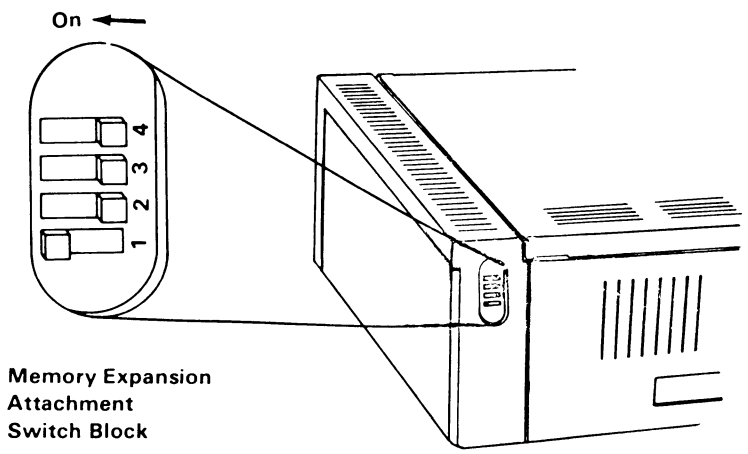

FIGURE 1.14

1st 128KB Memory Expansion Attachment	2nd 128KB Memory Expansion Attachment	3rd 128KB Memory Expansion Attachment
1 = On 2 = Off 3 = Off 4 = Off	1 = Off 2 = On 3 = Off 4 = Off	1 = Off 2 = Off 3 = On 4 = Off

128KB Memory Expansion Attachment Switch Settings

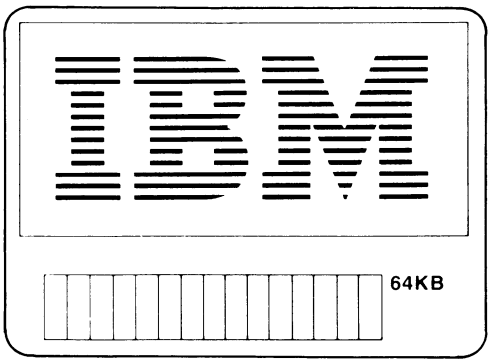

First, the IBM Color Bar Screen with correct memory appears.

Second, the system unit beeps once.

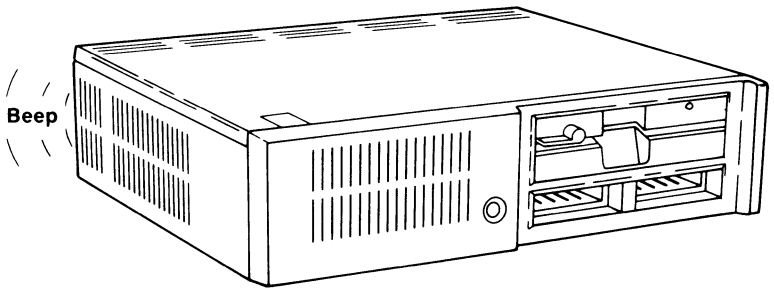

Third, the IBM Personal Computer Basic Message Screen appears (assumes no diskette installed).

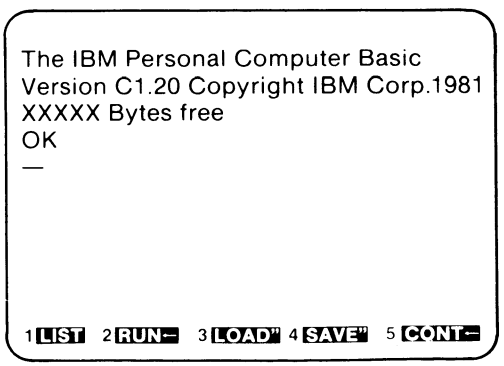

FIGURE 2.1

FIRST MENU SCREEN

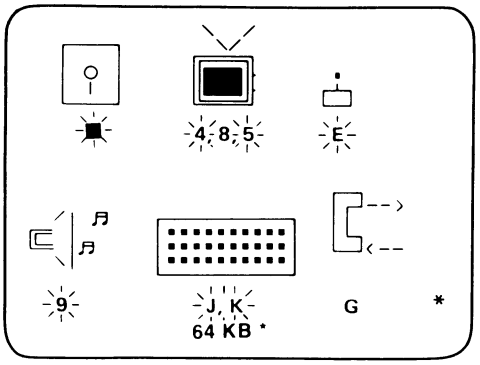

SECOND MENU SCREEN

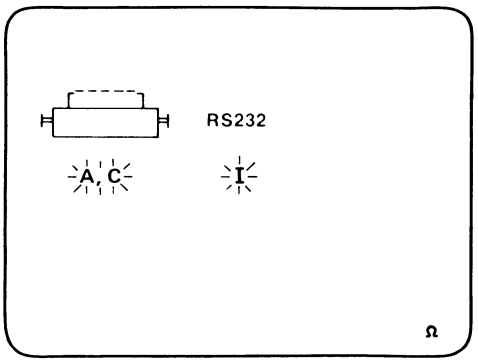

NOTE

The Advanced Test menu screen and the Customer Test menu screen look identical with one exception. The Test Tag under the joystick on the Advanced Test menu screen is an E . The Test Tag under the joystick on the Customer Test menu screen is a 6 .

The following chart explains what the symbols represent on the menu screen. An asterick (*) after a description means the symbol appears only when the option is attached to the system unit.

Diskette-drive test

Display and light pen test

Joystick test

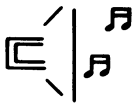
Sound test

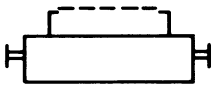
Graphics printer test

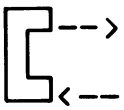
Internal modem test

Compact printer test*

RS232 Serial port test

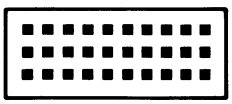
Keyboard test

FIGURE 2.2

FIRST IBM PC*jr* TEST MENU SCREEN

Test Tag	Name
1	Diskette Drive Test
4	TV and 40 Column Display Test
8	80 Column Display Test
5	Light Pen Test
6	Attachable Joystick Test
9	Sound Test
J	Keyboard Test
K	Reserved for future use
G	Modem Test

BLINKING TEST TAGS

The following Test Tags should always be blinking:

4,5,6,9 and J.

If any of them are not blinking, have your IBM PC*jr* serviced.

SECOND IBM PC*jr* TEST MENU SCREEN

Test Tag	Name
A	Graphics Printer Test
H	Compact Printer Test

Note: Test Tag H present only if Compact Printer is attached.

FIGURE 2.3

APPENDIX B

Personal Computer PC*jr*
Hardware Reference
Library

Hardware Maintenance and Service

First Edition (September 1983)

Changes are periodically made to the information herein; these changes will be incorporated in new editions of this publication.

Products are not stocked at the address below. Requests for copies of this product and for technical information about the system should be made to your authorized IBM Personal Computer dealer.

A Reader's Comment Form is provided at the back of this publication. If this form has been removed, address comments to IBM Corporation, Personal Computer, P.O. Box 1328-C, Boca Raton, Florida 33432. IBM may use or distribute any of the information you supply in any way it believes appropriate without incurring any obligations whatever.

© Copyright International Business Machines Corporation 1983

Contents

Section 1. Introduction 1-1
Description 1-3
Features 1-3
Options 1-3

Section 2. Introduction to Diagnostics 2-1
Required Items for Diagnostics 2-3
How to Perform Advanced POST 2-4
How to Perform Advanced Tests 2-8

Section 3. Problem Isolation Charts 3-1
Start 3-000-1
Undetermined Problem 3-010-1
Power 3-020-1
Memory 3-200-1
Keyboard 3-300-1
Display 3-500-1
Diskette Drive 3-600-1
Light Pen 3-800-1
Cartridge 3-810-1
Sound 3-820-1
Internal Modem 3-830-1
RS232 3-840-1
Parallel Printer Attachment 3-900-1
Joystick 3-1300-1
Graphics Printer 3-1400-1

Section 4. Removal Replacement and Adjustments 4-1
How to Use this Section 4-5
Power 4-020-1
Power Board Removal 020 4-020-1
Power Board Replacement 025 ... 4-020-3
System Unit 4-100-1

System Unit Top Cover Removal 100 4-100-1
System Unit Top Cover Replacement 105 4-100-2
Side Cover Removal 110 4-100-3
Side Cover Replacement 115 4-100-4
System Board Removal 120 4-100-5
System Board Replacement 125 . . 4-100-9
Memory 4-200-1
64KB Memory and Display Expansion Removal 200 4-200-1
64KB Memory and Display Expansion Replacement 205 4-200-2
Keyboard 4-300-1
Infra-Red Receiver Removal 300 . 4-300-1
Infra-Red Receiver Replacement 305 4-300-2
Keyboard Battery Replacement 310 4-300-3
Display 4-500-1
IBM Color Display Removal 500 . . 4-500-1
IBM Color Display Replacement 505 4-500-2
IBM Color Display Vertical Hold Adjustment 510 4-500-3
IBM Color Display Vertical Size Adjustment 515 4-500-4
Diskette Drive 4-600-1
Diskette-Drive Adapter Removal 600 4-600-1
Diskette-Drive Adapter Replacement 605 4-600-2
Diskette Drive Removal 610 4-600-3
Diskette Drive Replacement 615 . . 4-600-6
Diskette-Drive Mounting Bracket Removal 620 4-600-8
Diskette-Drive Mounting Bracket Replacement 625 4-600-9
Diskette-Drive Mounting Bracket Adjustment 630 4-600-10

Section 1. Introduction

Contents

Description **1-3**
Features 1-3
Options 1-3

Notes:

Description

The IBM PC*jr* is a low-cost, compact, table top computer. Many programs used by the family of IBM Personal Computers can also be used by the IBM PC*jr*.

Features

The IBM PC*jr* has this minimum configuration:

- IBM PC*jr* System Unit
  - 64K random access memory (RAM)
  - 64K read only memory (ROM)
  - Cassette, light pen, serial, and joystick ports
  - Direct drive video, composite video, and television ports
  - Infra-red receiver
  - Intel 8088 microprocessor
  - Three-voice sound generator
  - Two program cartridge slots
- IBM PC*jr* Cordless Keyboard
- IBM PC*jr* Power Transformer

Options

The IBM PC*jr* options are:

- IBM PC*jr* 64KB Memory and Display Expansion
- IBM PC*jr* Attachable Joystick
- IBM PC*jr* Adapter Cable for Cassette
- IBM PC*jr* Adapter Cable for Serial Devices
- IBM Connector for Television
- IBM PC*jr* Adapter Cable for IBM Color Display
- IBM PC*jr* Diskette-Drive Adapter
- IBM PC*jr* Keyboard Cord
- IBM Personal Computer Graphics Printer
- IBM Color Display
- IBM PC*jr* 5-1/4 inch Diskette Drive
- IBM PC*jr* Internal Modem
- IBM PC*jr* Parallel Printer Attachment
- IBM Personal Computer Printer Cable
- IBM Printer Stand

Section 2. Introduction to Diagnostics

Contents

Required Items for Diagnostics 2-3

How to Perform Advanced POST 2-4

How to Perform Advanced Tests 2-8

Notes:

Required Items for Diagnostics

In order to perform all of the advanced diagnostics, you must have:

- A system unit
- A keyboard
- A known good television receiver
- A service plug
- A POST-loop plug
- A parallel printer attachment wrap plug
- A serial wrap plug
- A Triplett Model 310 Multimeter (or equivalent)
- Access to a set of known good replacement parts

How to Perform Advanced POST

Before you perform advanced POST, do the following:

1. Set the system unit's Power switch to Off.
2. Set the display's Power switch to Off.
3. Connect the power transformer's power cord to a functioning, properly grounded outlet.
4. Install all connectors securely in their proper locations.

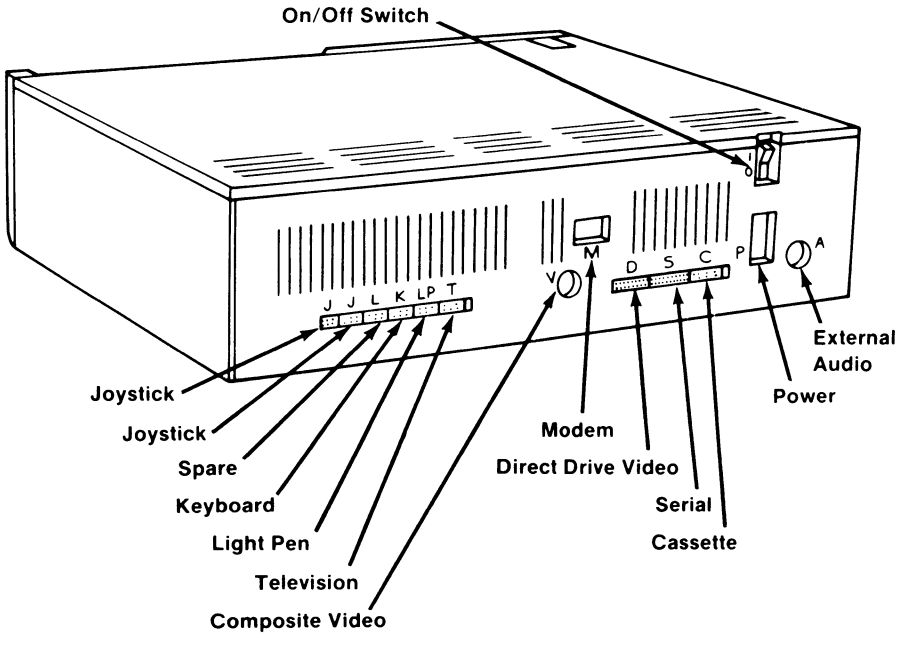

5. Remove any cartridge, cassette, or diskette from the system unit and attached devices.

6. If the cordless keyboard is being used without its optional keyboard cord:

   - Position the keyboard within 12 inches of the front of the system unit.

   - Remove any obstructions between the infra-red (IR) emitter in the back of the keyboard and the IR receiver on the system unit.

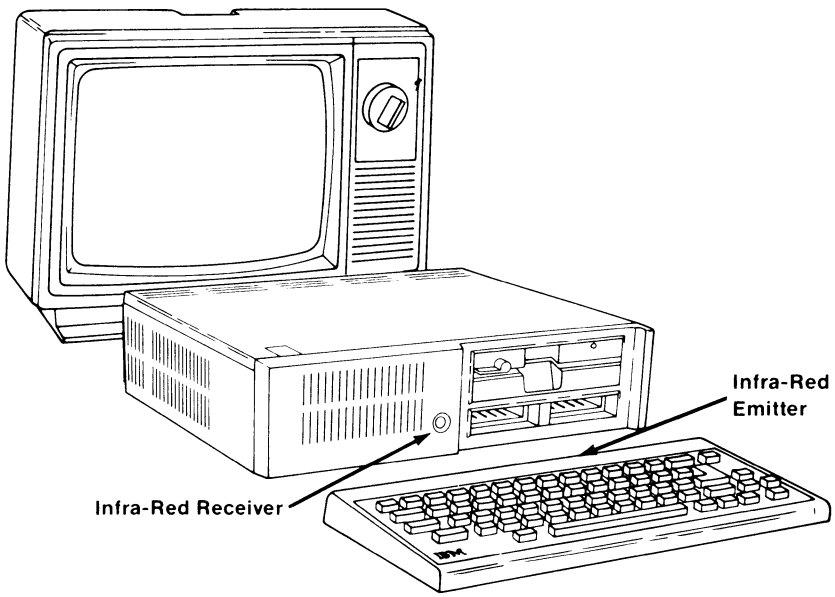

7. Plug the service plug into the system unit connectors J.

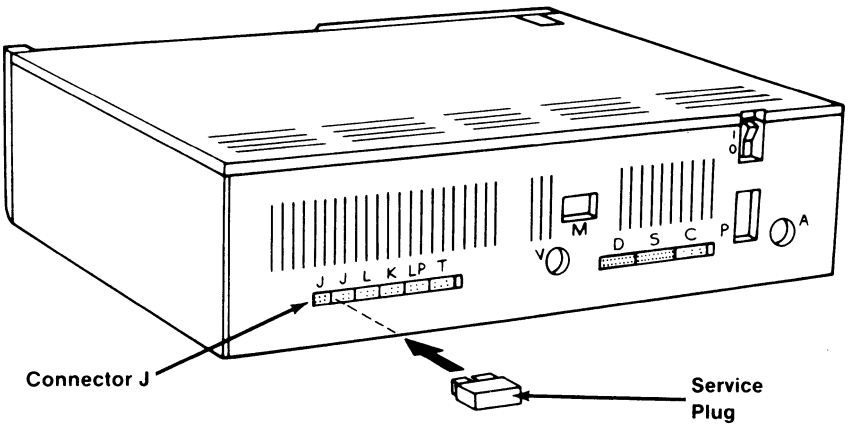

8. Turn the display's brightness, contrast, and volume controls to mid-range.

9. Set the display's Power switch to On.

10. Set the system unit's Power switch to On.

Advanced POST begins as soon as the system unit Power switch is set to On. It takes as long as one minute to complete. While advanced POST is running:

- You see a stable IBM logo and 16-color test pattern on your screen.

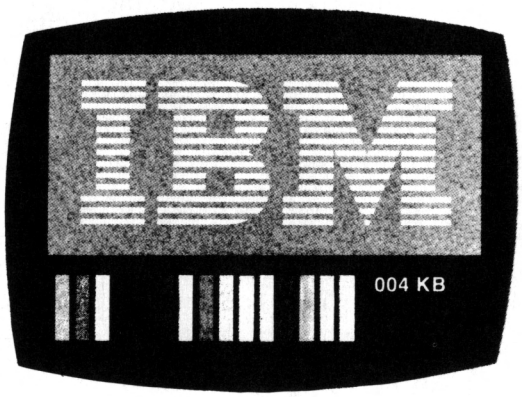

- You hear one beep.
- If attached, the diskette drive's red light switches on for a few seconds and then switches off.

When advanced POST completes without detecting a failure, the BASIC screen appears.

```
The IBM Personal Computer Basic
Version C1.20 Copyright IBM Corp.1981
XXXXX Bytes free
OK
_


1 LIST  2 RUN←  3 LOAD"  4 SAVE"  5 CONT←
```

If advanced POST detects a failure, you will receive an incorrect audio response (no beep, two beeps, or three beeps), an incorrect screen, an error message, or any combination of these. In these cases, see the Advanced POST Error Table on page 3-000-8 for the recommended action.

After you have followed the above steps once, all you have to do when asked to perform advanced POST is:

1. Set the system unit's Power switch to Off.

2. Wait five seconds.

3. Set the system unit's Power switch to On.

How to Perform Advanced Tests

Advanced tests are the tests you choose from the advanced-test menu. The advanced test menu is stored in the system unit's read only memory (ROM).

When you are asked to bring up the advanced-test menu, follow these steps:

1. Set the system unit's Power switch to On.

2. Wait until advanced POST completes and the BASIC screen appears.

3. Press and hold the Ctrl and Alt keys, and then press the Ins key.

4. Release all keys when the screen goes blank.

The IBM logo appears, the diskette drive (if attached) red light switches on for a moment, and you hear one beep. Then the advanced-test menu appears.

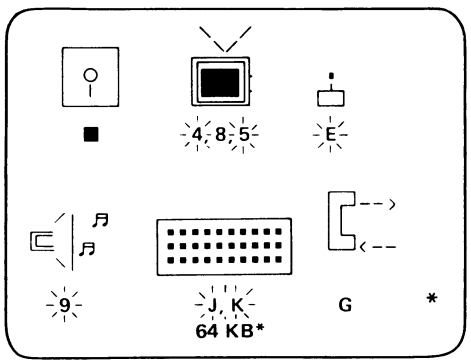

The advanced-test menu consists of symbols, with each symbol representing one area of the IBM PC*jr*. The letters or numbers below the symbols are IDs of tests you can perform.

If you see a "*" in the lower right-hand corner of the advanced-test menu, the menu has another page of symbols. When the cursor is moved to the last ID on the screen, moving it again causes this next menu page to appear.

On the last menu page, a "Ω" is in the lower right-hand corner. When the cursor is moved to the last ID on this screen, moving it again causes the first menu page to reappear.

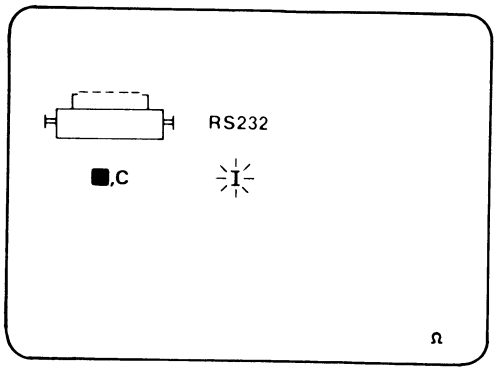

2-10

The following chart explains what the symbols on the advanced-test menu represent.

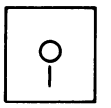

Diskette-drive test

Display and light pen test

Joystick test

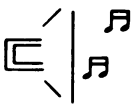

Sound test

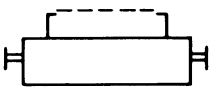

Graphics printer test

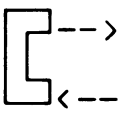

Internal modem test

RS232

Serial port test

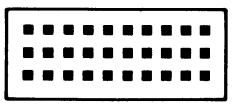

Keyboard test

When the IBM PC*jr* senses the presence of a device interface, the ID under the symbol for that device blinks. The device interface is the electronic circuitry necessary for the system unit to control a particular device. In the figure below, the interfaces for diskette drive, display, joystick, and sound are sensed.

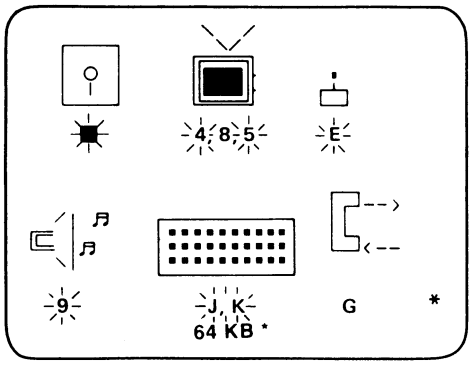

The IDs for joystick and sound always blink because their interfaces are on the system board. The blinking does NOT mean a joystick or external speaker is installed.

The diskette-drive interface is on the diskette-drive adapter. The ID under the diskette-drive symbol therefore blinks only when the diskette-drive adapter is installed.

The IDs "4" and "5" under the display symbol blink all the time. ID "8" blinks when the 64KB memory and display expansion is present. A list of interfaces and their locations follows:

Interface	Location
Diskette Drive	Diskette-drive adapter
Display	System board and 64KB memory and display expansion
Internal modem	Internal modem
Joystick	System board
Keyboard	System board
Light pen	System board
Memory	System board and 64KB memory and display expansion
Parallel printer	Parallel printer attachment
RS232	System board
Sound	System board

While the advanced-test menu is on your screen, a memory test is running continuously. The number incrementing at the bottom of the screen shows what segment of memory is being tested. If a memory failure is detected, the number stops incrementing and the "*"

next to it is replaced by an error message. If this failure occurs, make a note of the error message and go to PIC "Memory."

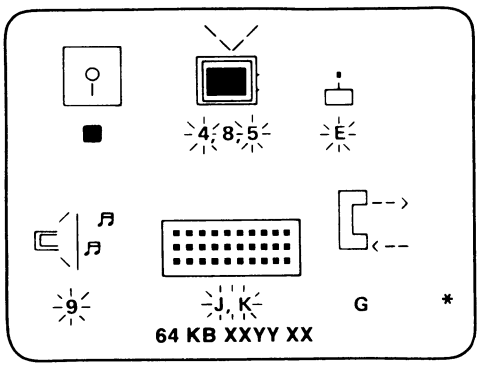

Before starting an advanced test, go to the PIC for that test. At the beginning of each PIC any special requirements or set-up instructions are explained to you.

You move the cursor to the test's ID by pressing the Ins key. When you are ready to start the test, press the Enter key and the test begins.

The test is finished when a message appears under the symbol's ID. If "*" appears, no failure was detected.

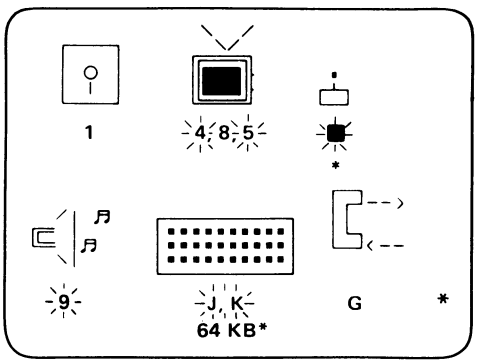

If something other than "*" appears, a failure was detected and you should follow the PIC for that test.

If you want to stop a test that is running, press the Fn key, and then press the B key. Depending on which test is running, you can get one of several responses after pressing Fn-B. The following table lists the responses.

Test Running	Response to Pressing Fn-B
Diskette Drive Internal Modem Sound Parallel Printer Attachment	(If the system unit beeps, press Fn-B again.) Test may stop immediately. Message is "FFFF."
Display RS232	Test stops immediately. Message is "FFFF."
Keyboard	The Fn and B keys must be shown on the screen before using them to abort the test. Test stops immediately. Message is "*."
Joystick Light Pen	Test stops immediately. Message is "*."

The "FFFF" message lets you know that the test was stopped before completion.

When you want to remove the advanced-test menu from your screen, press and hold the Ctrl and Alt keys, and then press the Del key.

Section 3. Problem Isolation Charts

Contents

Start **3-000-1**
Advanced POST Error Table 3-000-8

Undetermined Problem **3-010-1**

Power **3-020-1**

Memory **3-200-1**

Keyboard **3-300-1**

Display **3-500-1**

Diskette Drive **3-600-1**

Light Pen **3-800-1**

Cartridge **3-810-1**

Sound **3-820-1**

Internal Modem **3-830-1**

RS232 ..... **3-840-1**

Parallel Printer Attachment **3-900-1**

Joystick **3-1300-1**

Graphics Printer **3-1400-1**

PICs

Notes:

Start

This is the entry point for using all of the PICs. Start here when beginning any service activity.

Follow the 10 steps listed in "How to Perform Advanced POST" beginning on page 2-4, then return to here.

Note: If advanced POST successfully completes, the BASIC screen appears.

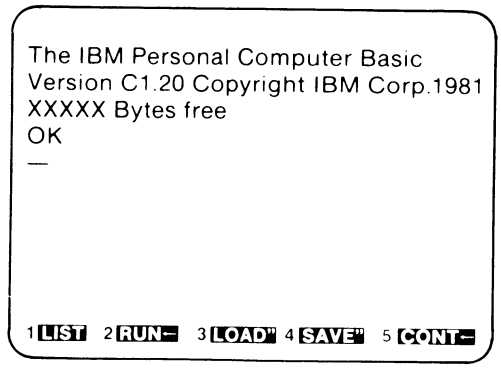

DID ADVANCED POST SUCCESSFULLY COMPLETE?

NO Make a note of how advanced POST failed.

Go to the Advanced POST Error Table on page 3-000-8.

YES →

Start 3-000-1

Bring up the advanced-test menu to your screen. (If you need instructions on how to bring up the advanced-test menu, go to page 2-8).

The IBM logo appears, the diskette-drive (if attached) red light switches on for a moment, and you hear one beep. Then the advanced-test menu appears.

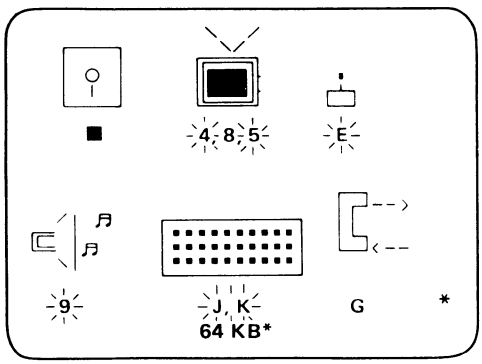

DID THE ADVANCED-TEST MENU APPEAR ON YOUR SCREEN?

NO Go to the PIC "Keyboard" on page 3-300-1.

YES

3-000-2 Start

There may be a diskette drive installed in the system unit.

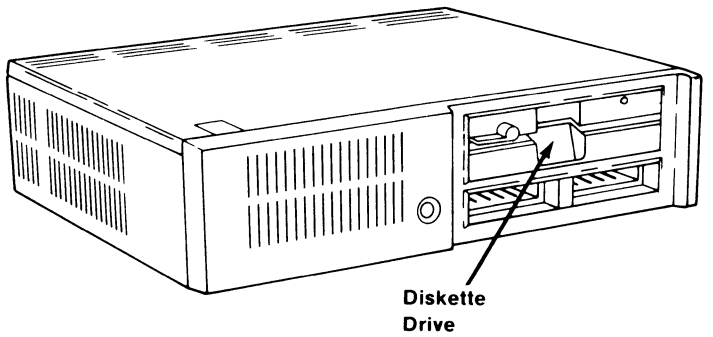

PICs

IS A DISKETTE DRIVE INSTALLED IN THE SYSTEM UNIT?

NO Go to page 3-000-5.

YES

Start 3-000-3

1. Set the system unit's Power switch to Off.
2. Remove the system unit top cover.
3. Set the system unit's Power switch to On.
4. Observe the diskette-drive fan.

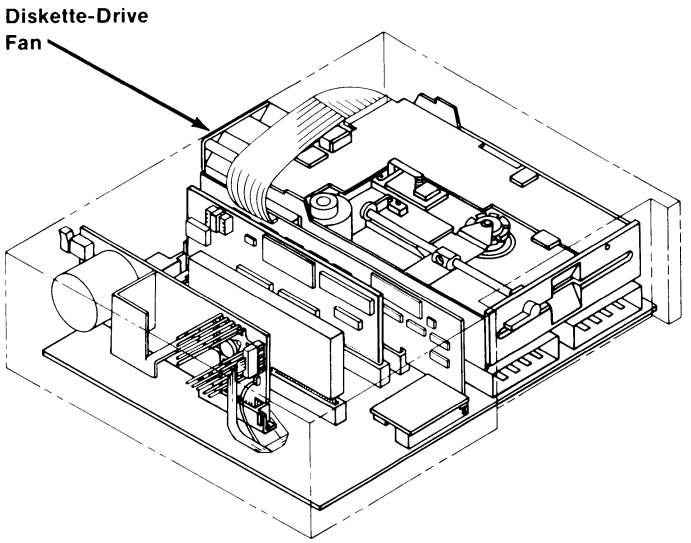

IS THE DISKETTE-DRIVE FAN RUNNING?

NO Go to page 3-000-6.

YES

3-000-4 Start

You are now ready to proceed with the advanced tests.

If you do not know what area of the IBM PC*jr* may be failing, you have an undetermined problem.

If a failure occurs only occasionally, you have an intermittent problem.

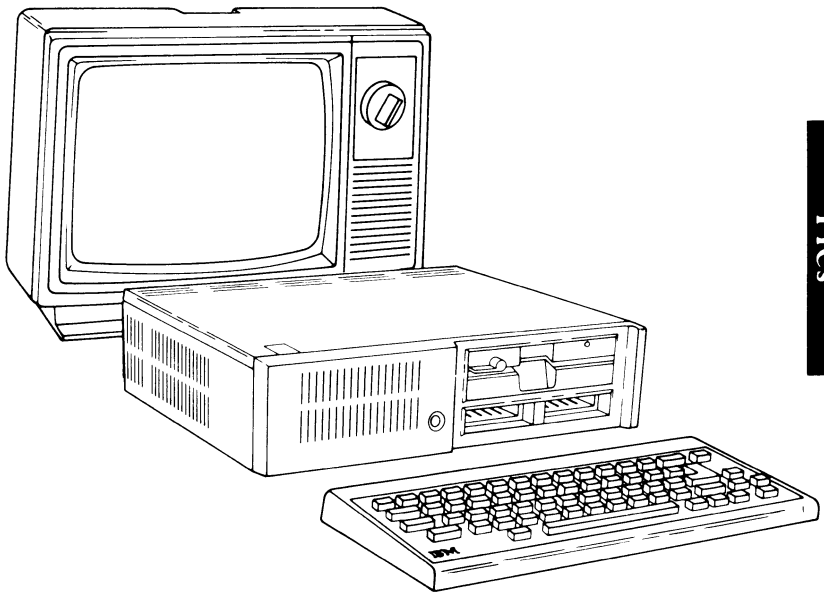

PICs

DO YOU HAVE AN UNDETERMINED OR INTERMITTENT PROBLEM?

NO Go to the PIC for the area you want to test. (See the Contents page at the beginning of Section 3 for the PIC locations).

YES Go to the PIC "Undetermined Problem" on page 3-010-1.

Start 3-000-5

The diskette-drive fan is not running.

1. Set the system unit's Power switch to Off.

   Warning: Be careful when the top cover is off the system unit. The components on the power board can become hot with the system unit on.

2. Allow the power board to cool.

3. Disconnect the diskette-drive fan power cable from the power board.

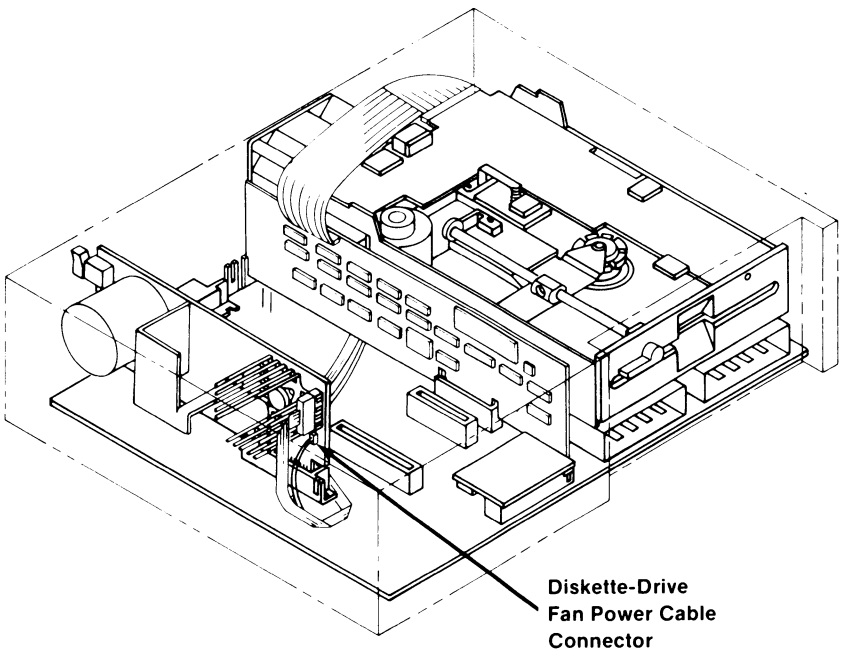

CONTINUE

3-000-6 Start

4. The voltages at the diskette-drive fan connector on the power board should be within the ranges listed below.

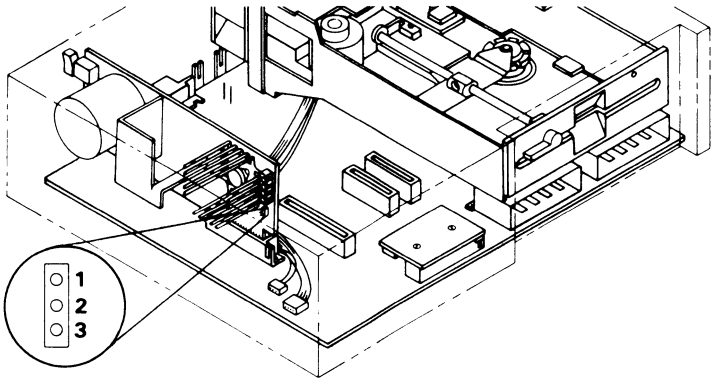

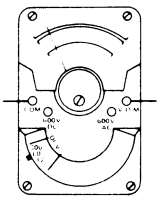

			Low Vdc	High Vdc
Pin 2	to	Pin 1	11.4	12.6
Pin 2	to	Pin 3	11.4	12.6

WERE YOU ABLE TO READ THE CORRECT VOLTAGES?

NO The power board is bad. Replace it.

Repeat advanced POST and the advanced tests to ensure that the IBM PC*jr* is operating correctly.

YES The diskette-drive fan is bad. Replace it.

Repeat advanced POST and the advanced tests to ensure that the IBM PC*jr* is operating correctly.

Start 3-000-7

PICs

Advanced POST Error Table (Part 1 of 4)

POST Error	Problem Area	What To Do	Page
No beep. No image or image on screen wrong	Power	Go to PIC "Power."	3-020-1
One beep. No image or image on screen wrong	Display	Go to PIC "Display."	3-500-1
Two beeps. No image or image on screen wrong	Power	Go to PIC "Power."	3-020-1
Three beeps. No image or image on screen wrong	Memory	Replace 64KB memory and display expansion. Repeat advanced POST. If same error, go to PIC "Memory."	4-200-1
"X" can be any number.			
Before replacing any item, ensure that all internal cables are correctly connected. Treat replaced items with care. You may be asked to reattach them.			

3-000-8 Start

Advanced POST Error Table (Part 2 of 4)

POST Error	Problem Area	What To Do	Page
Advanced POST, or portion of it, goes into loop	System board	Replace system board.	4-100-1
No beep. ERROR 0AXX	Memory	Replace system board. Repeat advanced POST. If same error, go to PIC "Power."	4-100-1
No beep. ERROR 0BXX	Memory	Replace 64KB memory and display expansion. Repeat advanced POST. If same error, go to PIC "Memory."	4-200-1
No beep. ERROR 0CXX	Memory	Replace 64KB memory and display expansion. Repeat advanced POST. If same error, go to PIC "Memory."	4-200-1
"X" can be any number.			
Before replacing any item, ensure that all internal cables are correctly connected. Treat replaced items with care. You may be asked to reattach them.			

PICs

Start 3-000-9

Advanced POST Error Table (Part 3 of 4)

POST Error	Problem Area	What To Do	Page
No beep. ERROR 1YXX	Memory	Replace system board. Repeat advanced POST. If same error, go to PIC "Power."	4-100-1
No beep. ERROR 2000	Keyboard	Replace keyboard. Repeat advanced POST. If same error, go to PIC "Keyboard."	3-300-1
No beep. ERROR 21XX	Infra-Red	Replace infra-red receiver. Repeat advanced POST. If same error, go to PIC "Keyboard."	4-300-1
No beep. ERROR 22XX	Keyboard	Replace keyboard. Repeat advanced POST. If same message, go to PIC "Keyboard."	3-300-1
"X" can be any number.			
Before replacing any item, ensure that all internal cables are correctly connected. Treat replaced items with care. You may be asked to reattach them.			

3-000-10 Start

Advanced POST Error Table (Part 4 of 4)

POST Error	Problem Area	What To Do	Page
No beep. ERROR 23XX	Cassette or Serial	Replace system board. Repeat advanced POST. If same error, go to PIC "Power."	4-020-1
No beep. ERROR 24XX	Modem	Replace internal modem.	4-830-1
No beep. ERROR 25XX	Cartridge	Go to PIC "Cartridge."	3-810-1
No beep. ERROR 26XX	Diskette drive	Replace diskette-drive adapter. Repeat advanced POST. Is same message, go to PIC "Diskette Drive."	4-600-1
Any ERROR message not listed in this table	Service plug	Ensure that service plug is good and installed correctly. Repeat advanced POST. If same message, replace system board.	2-6
"X" can be any number.			
Before replacing any item, ensure that all internal cables are correctly connected. Treat replaced items with care. You may be asked to reattach them.			

PICs

Start 3-000-11

Notes:

Undetermined Problem

You are entering this PIC for one of the following reasons:

- You have an undetermined problem.
- You have an intermittent problem.

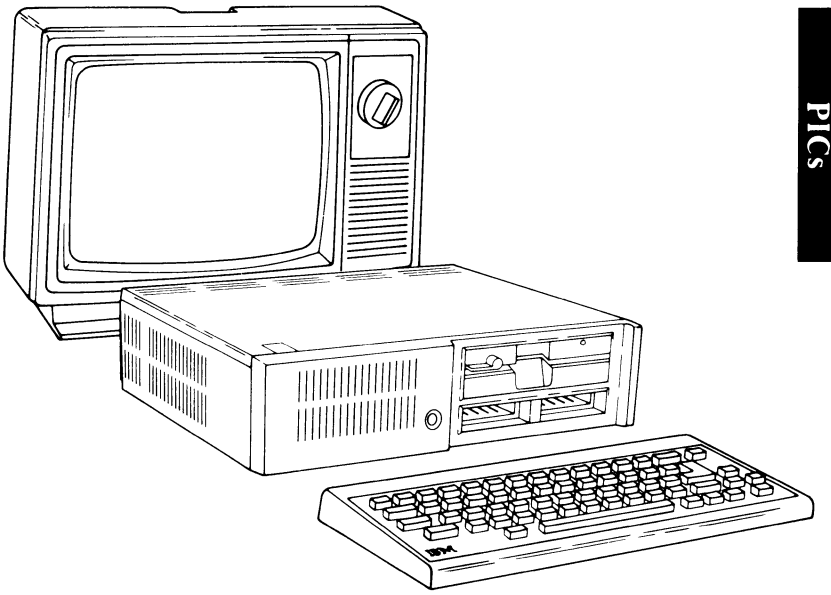

PICs

DO YOU HAVE AN UNDETERMINED PROBLEM?

NO Go to page 3-010-4.

YES

Undetermined Problem 3-010-1

All IBM PC*jr* service activity should begin at the PIC "Start."

Start

This is the entry point for using all of the PICs. Start here when beginning any service activity.

Follow the 10 steps listed in "How to Perform Advanced POST" beginning on page 2-4, then return to here.

Note: If advanced POST successfully completes, the BASIC screen appears.

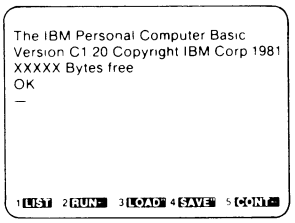

DID ADVANCED POST SUCCESSFULLY COMPLETE?

PICs

DID YOU FOLLOW THE STEPS IN THE PIC "START"?

NO Go to the PIC "Start" on page 3-000-1.

YES

3-010-2 Undetermined Problem

1. Bring the advanced-test menu to your screen.

2. Perform the advanced tests for all devices attached to the IBM PC*jr*. Before performing an advanced test, refer to that test's PIC for special requirements and set-up instructions.

- Keyboard.
- Display.
- Sound.
- RS232.
- Diskette drive, if present.
- Internal modem, if present.
- Attachable joystick, if present.
- Light pen, if present.
- Parallel printer attachment, if present.
- Graphics printer, if present.

See the Contents page at the beginning of Section 3 for the PIC locations.

PICs

DID ANY OF THE ADVANCED TESTS FAIL?

YES Go to the PIC for the failing device.

NO

Undetermined Problem 3-010-3

You may have an intermittent problem.

Advanced POST can be made to repeat indefinitely. It tests the system board and the memory. The loop stops if a failure in either area is detected.

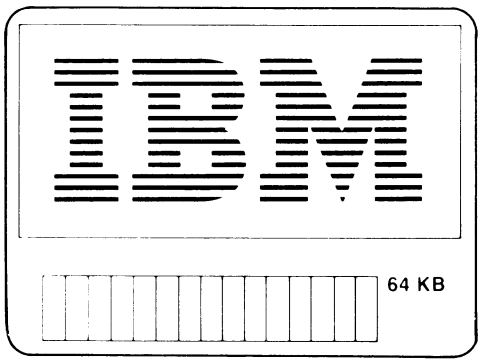

DO YOU WANT TO LOOP THE ADVANCED POST?

NO Go to page 3-010-6.

YES

3-010-4 Undetermined Problem

1. Set the system unit's Power switch to Off.
2. Plug the POST-loop plug into the system unit connector Js.
3. Set the system unit's Power switch to On.

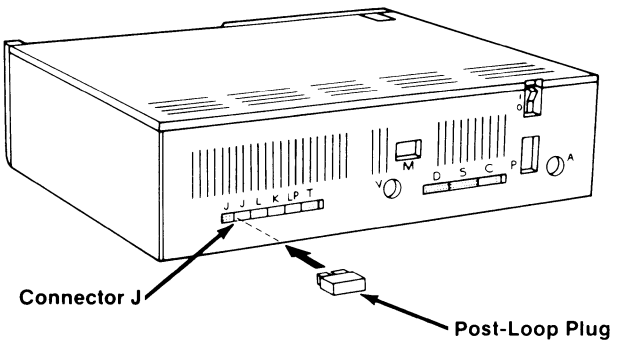

PICs

DID ADVANCED POST LOOP SEVERAL TIMES WITHOUT DETECTING A FAILURE?

NO Make a note of the failure.

Go to the Advanced POST Error Table on page 3-000-8.

YES

Undetermined Problem 3-010-5

1. Turn to page 3-020-8 in PIC "Power."

2. Ensure that all voltages described on pages 3-020-8 through 3-020-10 are within their specified ranges.

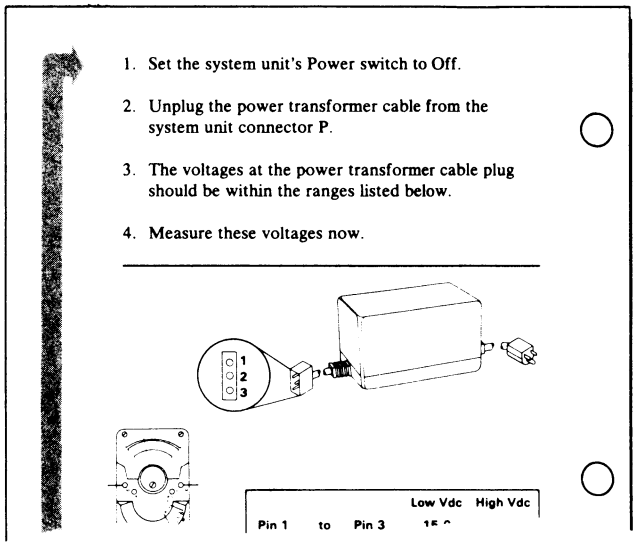

ARE ALL THE VOLTAGES WITHIN THEIR SPECIFIED RANGES?

NO The PIC "Power" indicates which FRU is bad. Replace that FRU.

Repeat advanced POST and the advanced tests to ensure that the IBM PC*jr* is operating correctly.

YES You have finished the undetermined problem PIC. If you still have an unsolved problem, you should seek technical assistance.

3-010-6 Undetermined Problem

SR28-0494-1
Course 71021

IBM 4860 PCjr Product Training Student Guide Printed in U.S.A. SR28-0494-1

SR28-0494-01

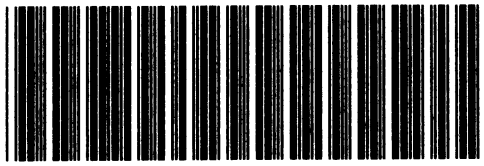

16

P/N HISTORY		
DATE	EC	P/N
9 AUG 84	340365	6136001

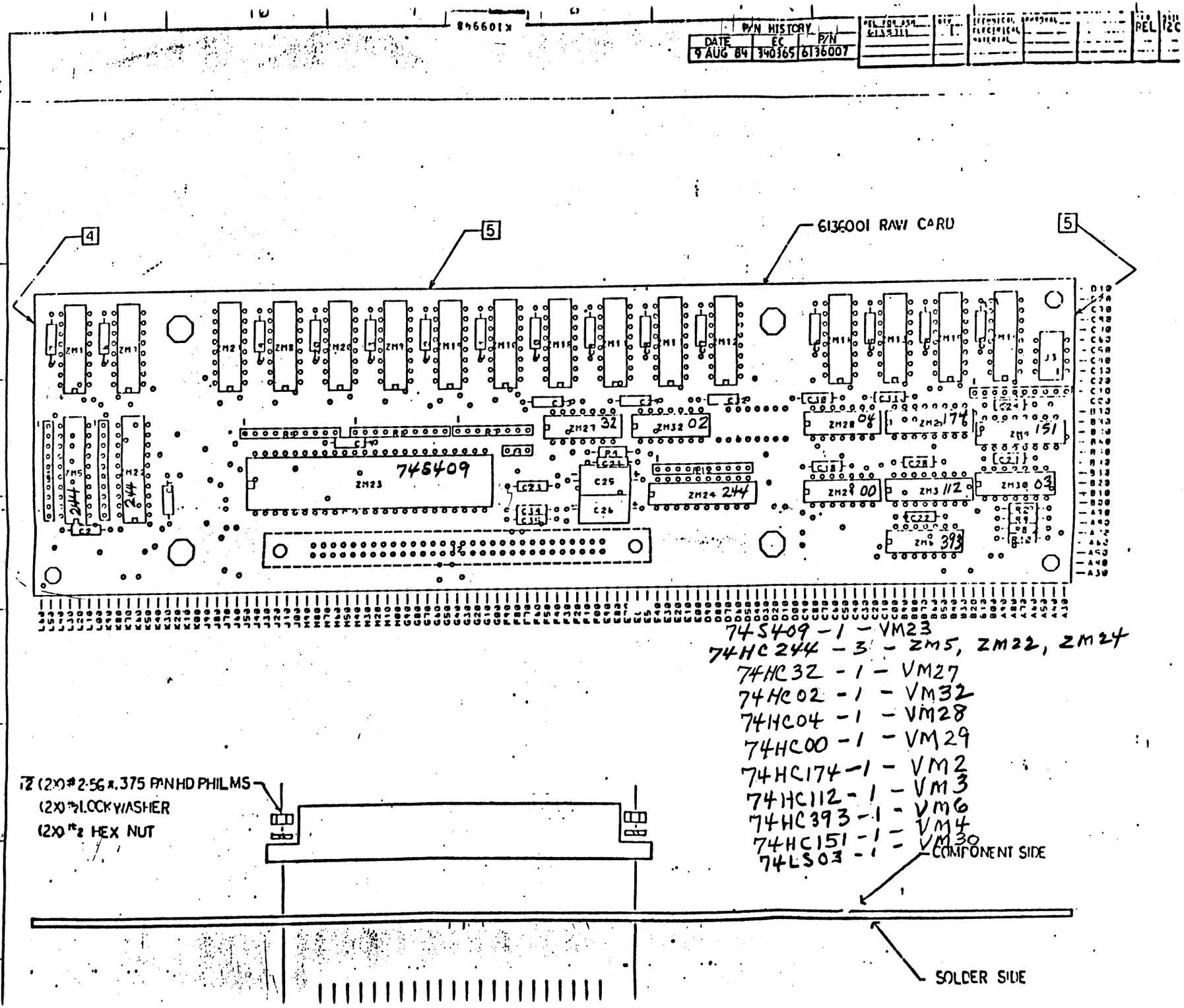

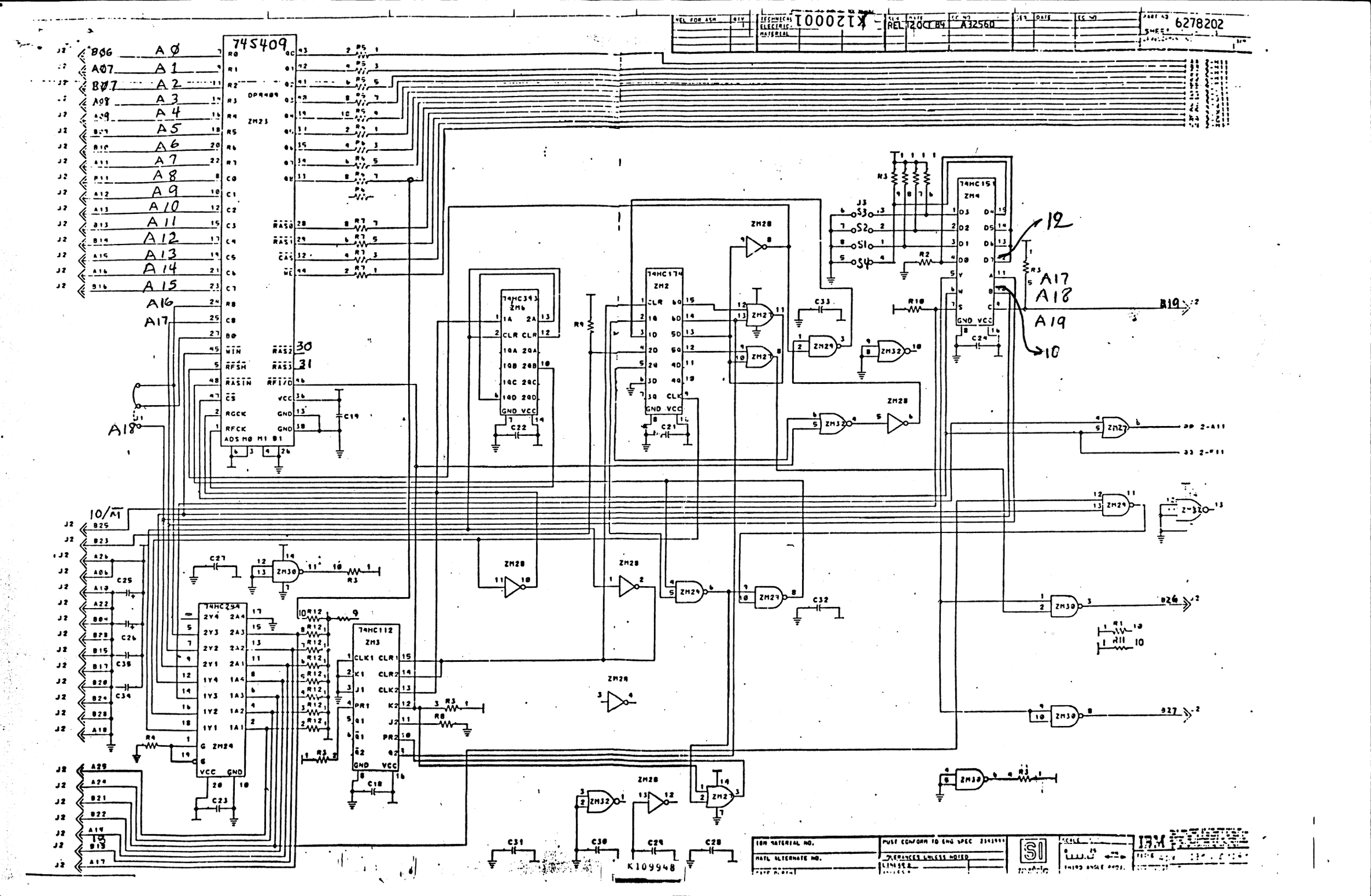

K120001
REL 12 OCT 84
A32560
6278202
745409
DPR409
ZM23
74HC393
ZM6
74HC174
ZM2
74HC151
ZM4
74HC244
ZM24
74HC112
ZM3
ZM28
ZM27
ZM29
ZM30
ZM32
A0
A1
A2
A3
A4
A5
A6
A7
A8
A9
A10
A11
A12
A13
A14
A15
A16
A17
A18
A19
B06
A07
B07
A08
A09
B09
B10
A11
B11
A12
A13
B13
B14
A15
A16
B16
B19
B26
B27
10/M1
J3
S3
S2
S1
S4
K109948
IBM MATERIAL NO.
MATL ALTERNATE NO.
MUST CONFORM TO ENG SPEC
TOLERANCES UNLESS NOTED
SCALE
THIRD ANGLE PROJ.
IBM

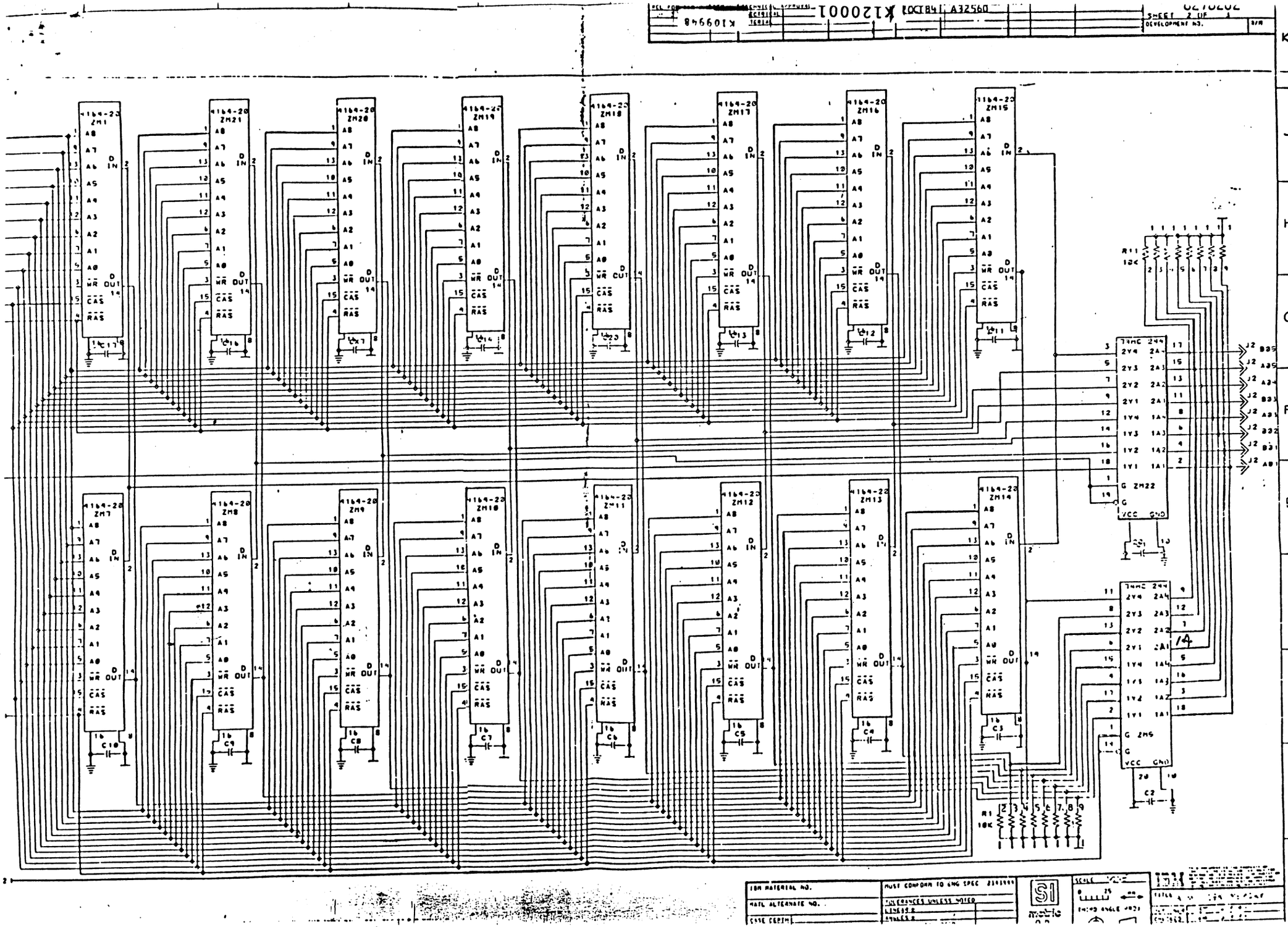

K120001
A32560
SHEET 2 OF 2
DEVELOPMENT NO.
4164-20 ZM1
4164-20 ZM21
4164-20 ZM20
4164-20 ZM19
4164-20 ZM18
4164-20 ZM17
4164-20 ZM16
4164-20 ZM15
4164-20 ZM7
4164-20 ZM8
4164-20 ZM9
4164-20 ZM10
4164-20 ZM11
4164-20 ZM12
4164-20 ZM13
4164-20 ZM14
74HC 244
ZM22
ZM5
R11 10K
R1 10K
IBM MATERIAL NO.
MATL ALTERNATE NO.
CASE DEPTH
MUST CONFORM TO ENG SPEC
TOLERANCES UNLESS NOTED
LINEAR
ANGLES
SCALE
THIRD ANGLE PROJ